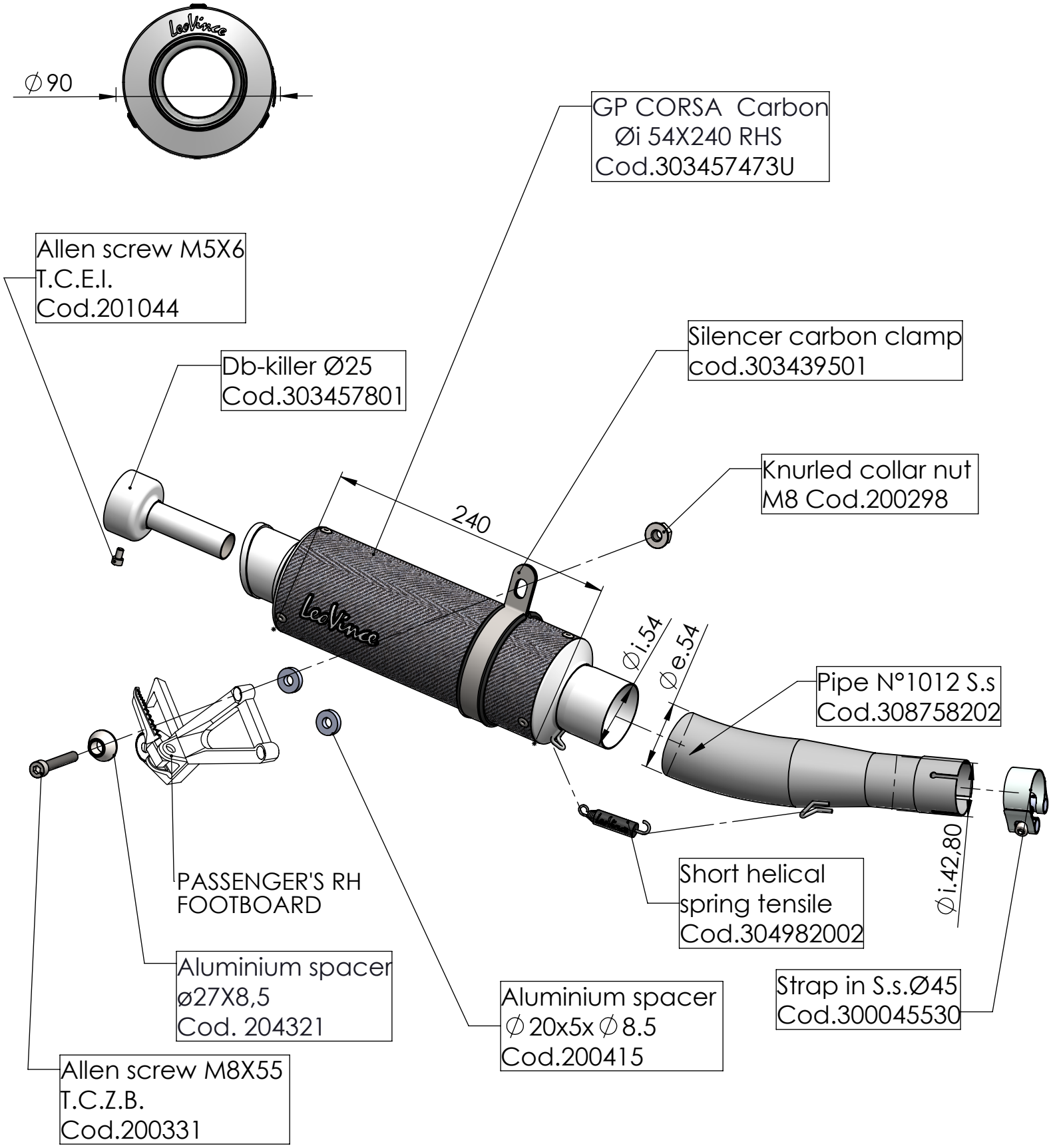

ART. 8760U

HONDA CBR 500 R / CB 500 F / CB 500 X

SLIP ON - GP CORSA - CARBON