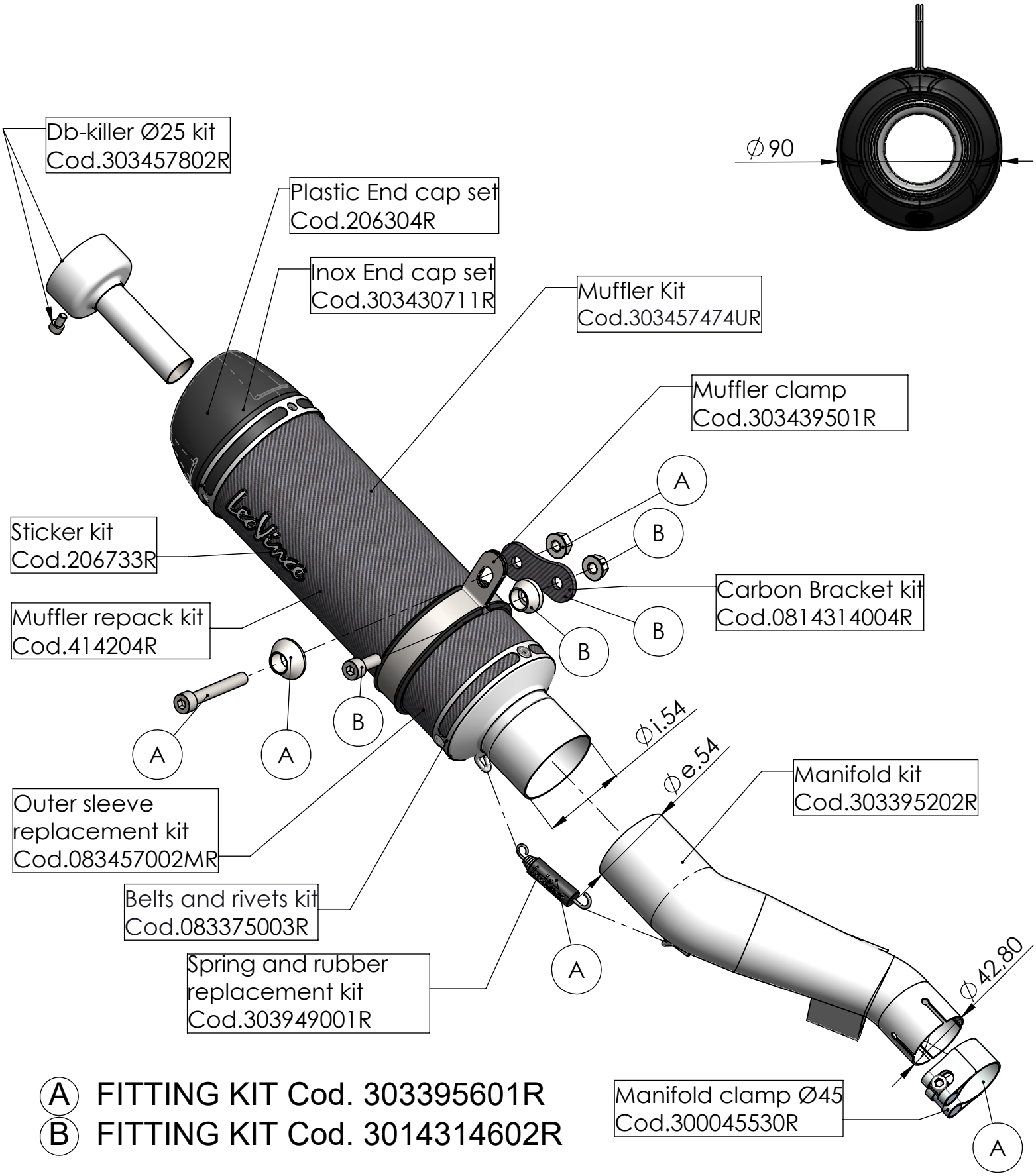

Ⓐ FITTING KIT Cod. 303395601R
Ⓑ FITTING KIT Cod. 3014314602R

ART. 3395EU - SPARE PARTS

HONDA CB 500F / CBR 500R / CB 500X
(fits with original centre stand)

SLIP-ON - GP CORSA EVO - CARBON