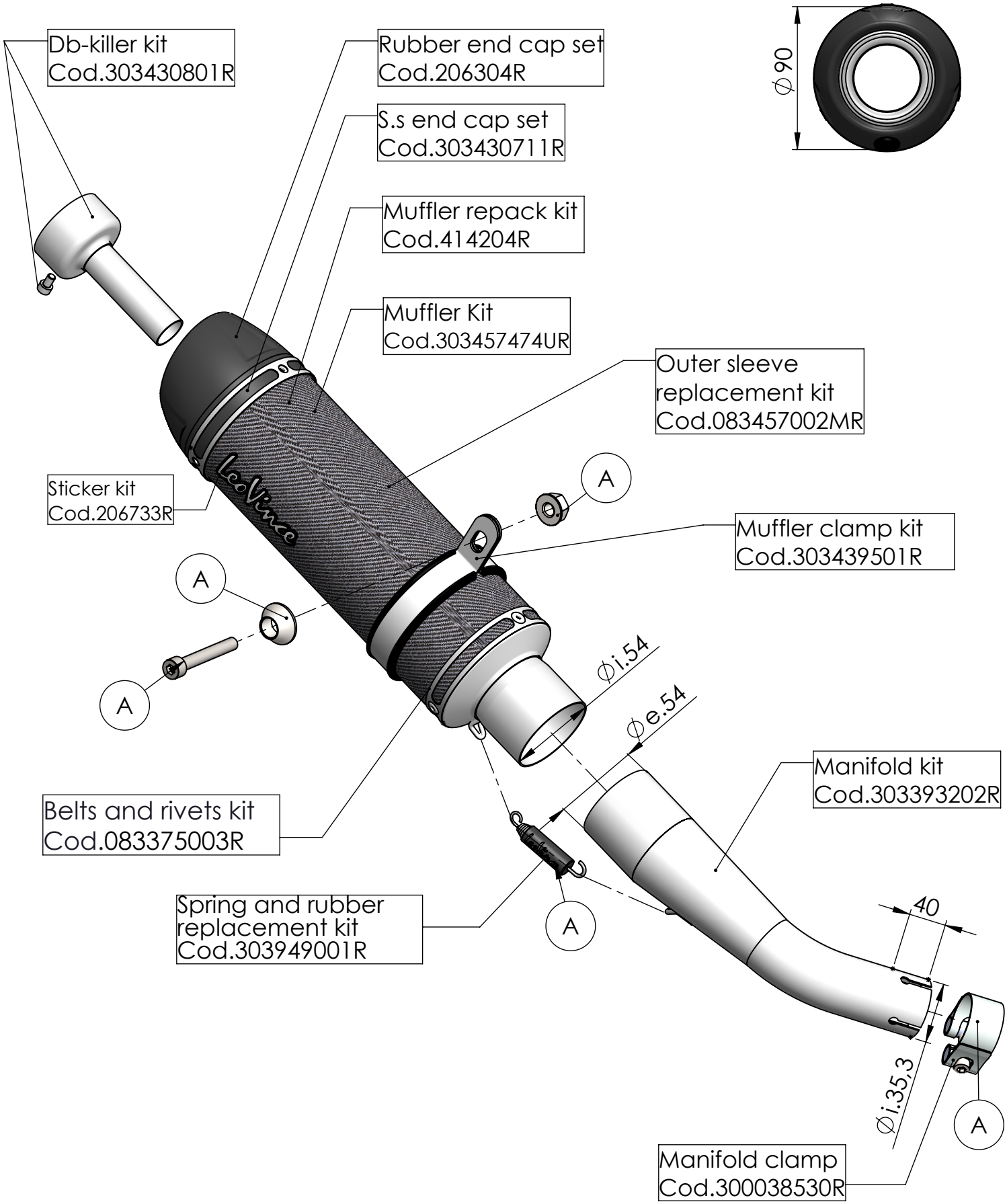

ART. 3393EU - SPARE PARTS

KAWASAKI NINJA 125 - Z 125

Ⓐ FITTING KIT Cod. 303393601R