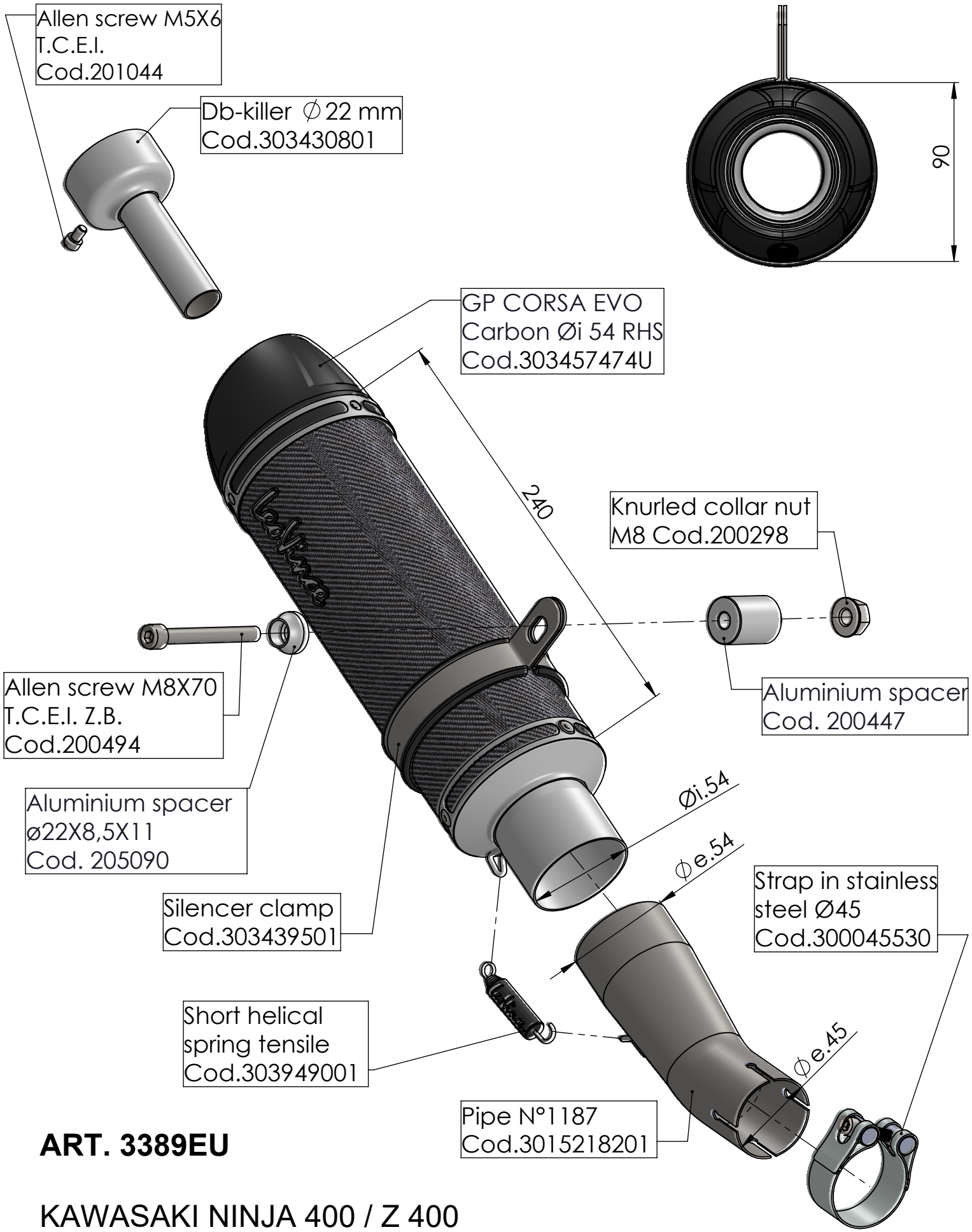

ART. 3389EU

KAWASAKI NINJA 400 / Z 400

KAWASAKI NINJA 500 / Z 500

SLIP-ON - GP CORSA EVO