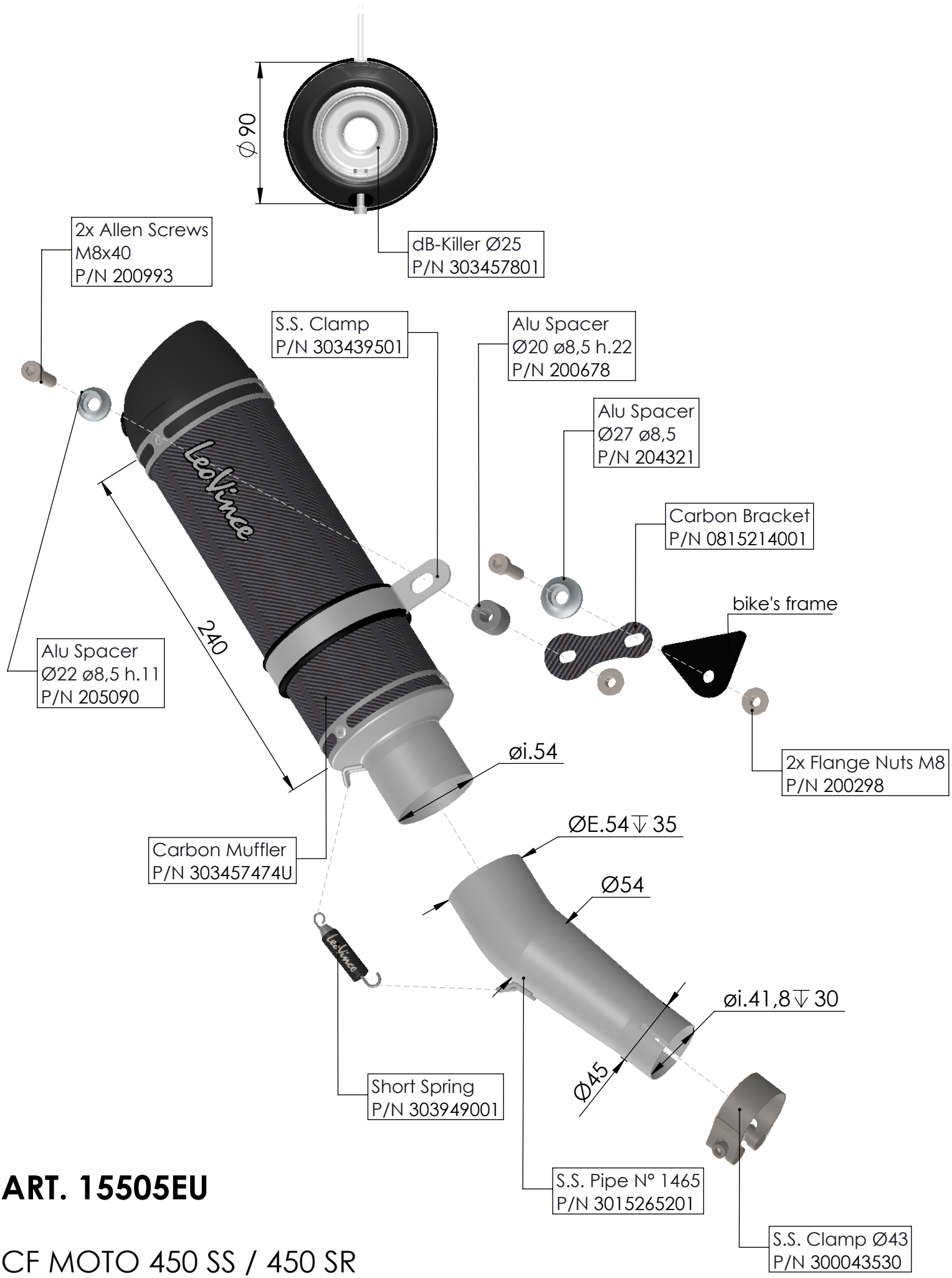

ART. 15505EU

CF MOTO 450 SS / 450 SR

SLIP-ON GP CORSA EVO CARBON