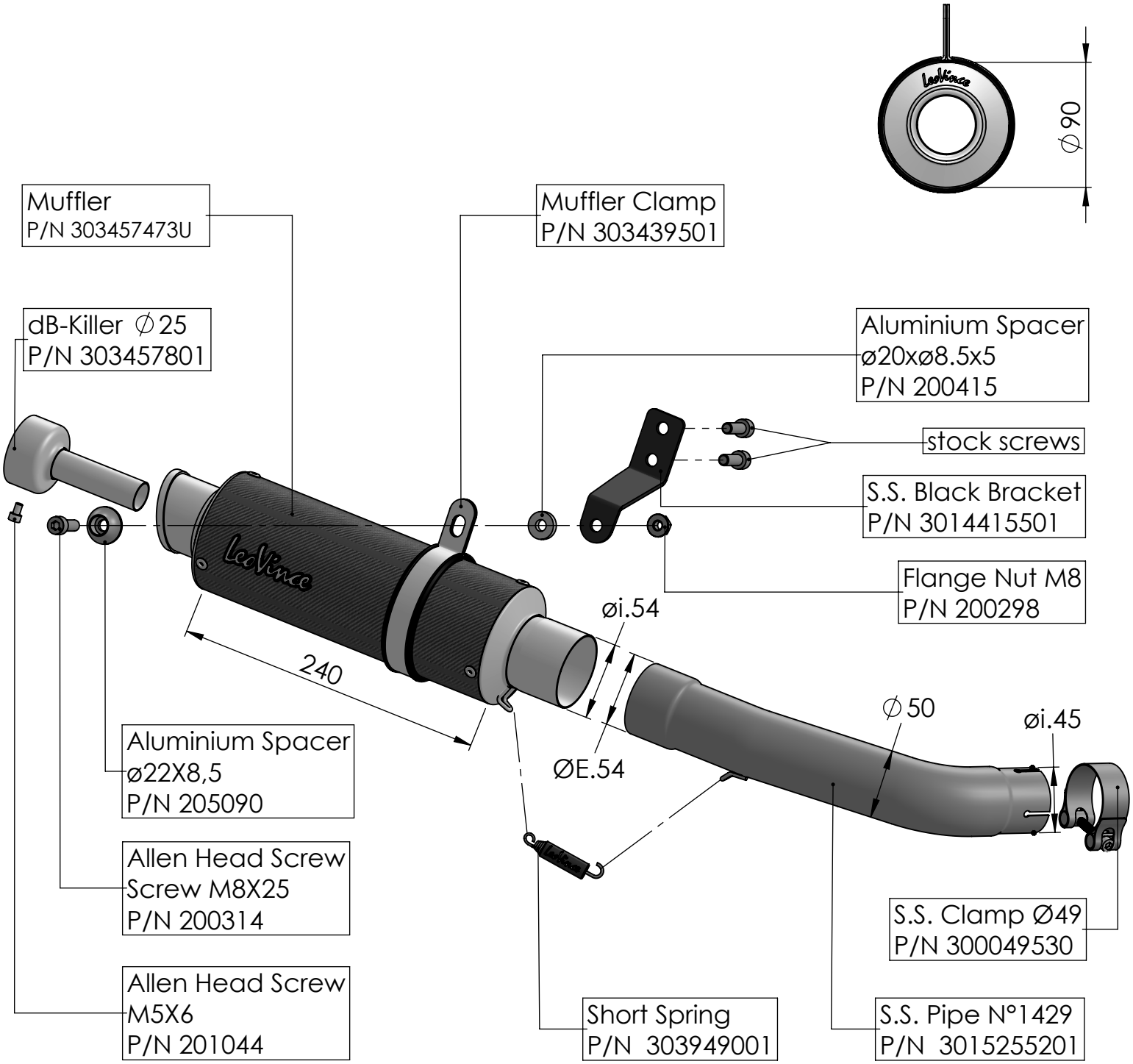

ART. 15501U

KTM RC 125 / 390

SLIP-ON - GP CORSA - CARBON