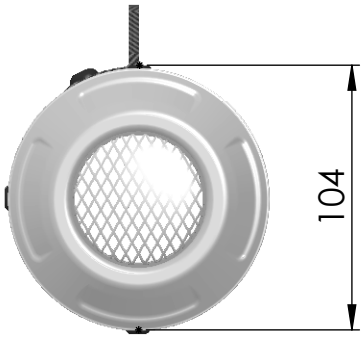

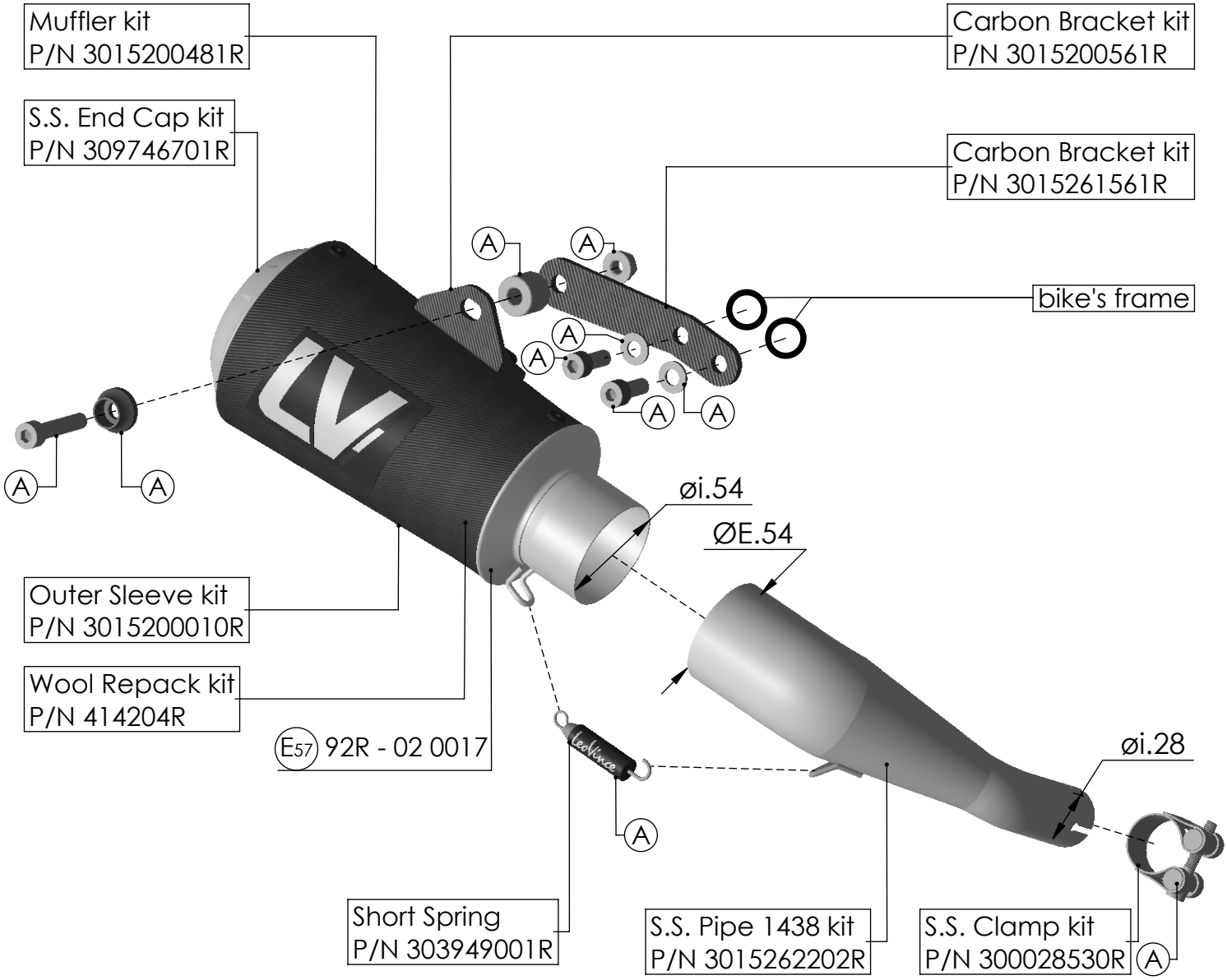

(A) - FITTING KIT - P/N 3015262601R

ART. 15262C - SPARE PARTS

BENELLI TNT TORNADO NAKED T 125/135

SLIP-ON LV-10 CARBON - APPROVED