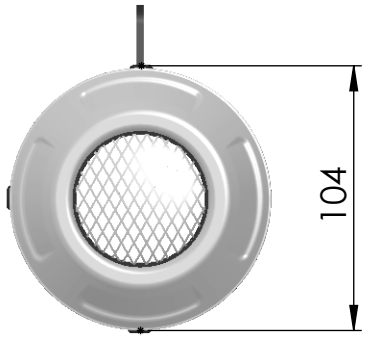

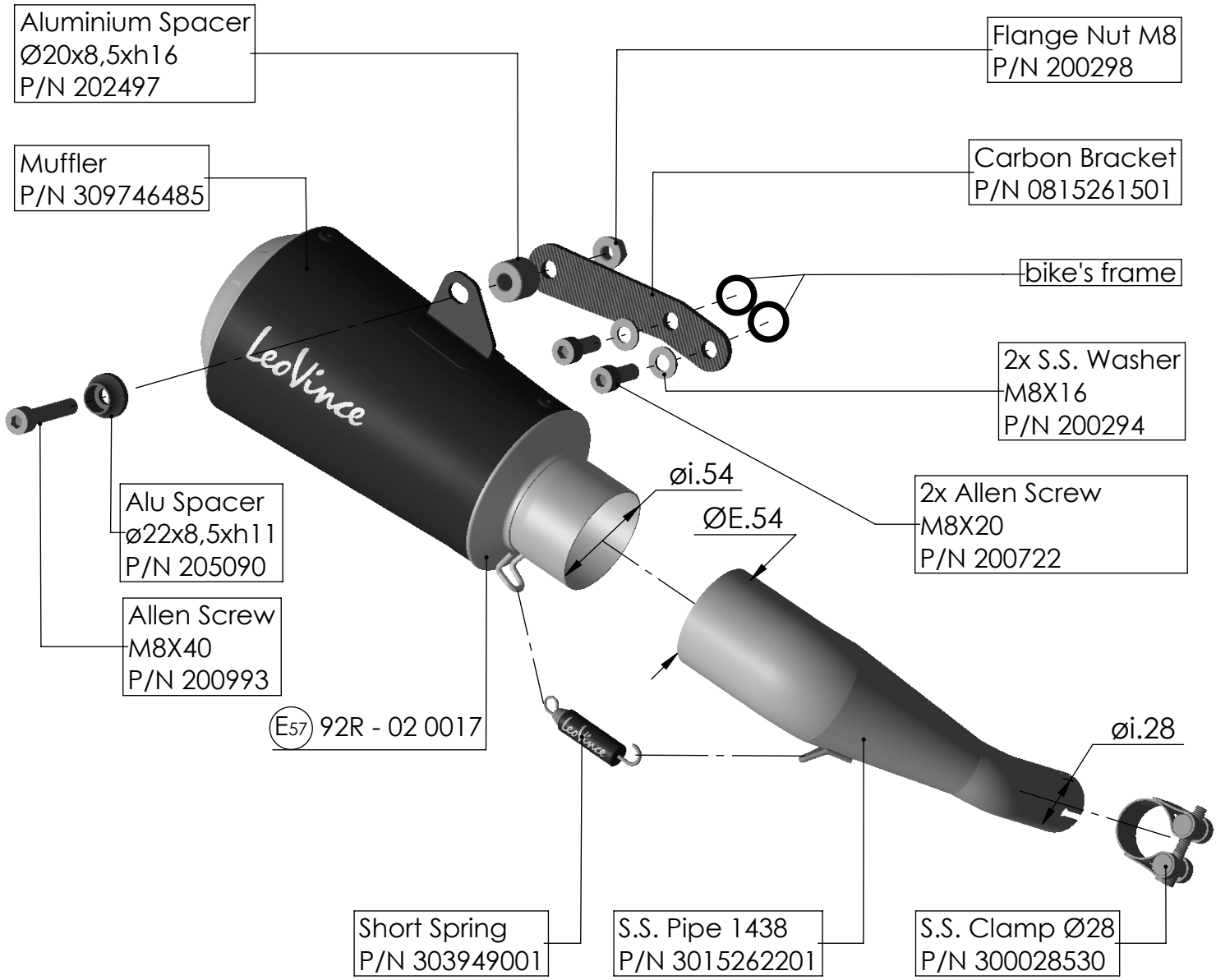

ART. 15262B

BENELLI TNT TORNADO NAKED T 125/135

SLIP-ON LV-10 BLACK EDITION - APPROVED