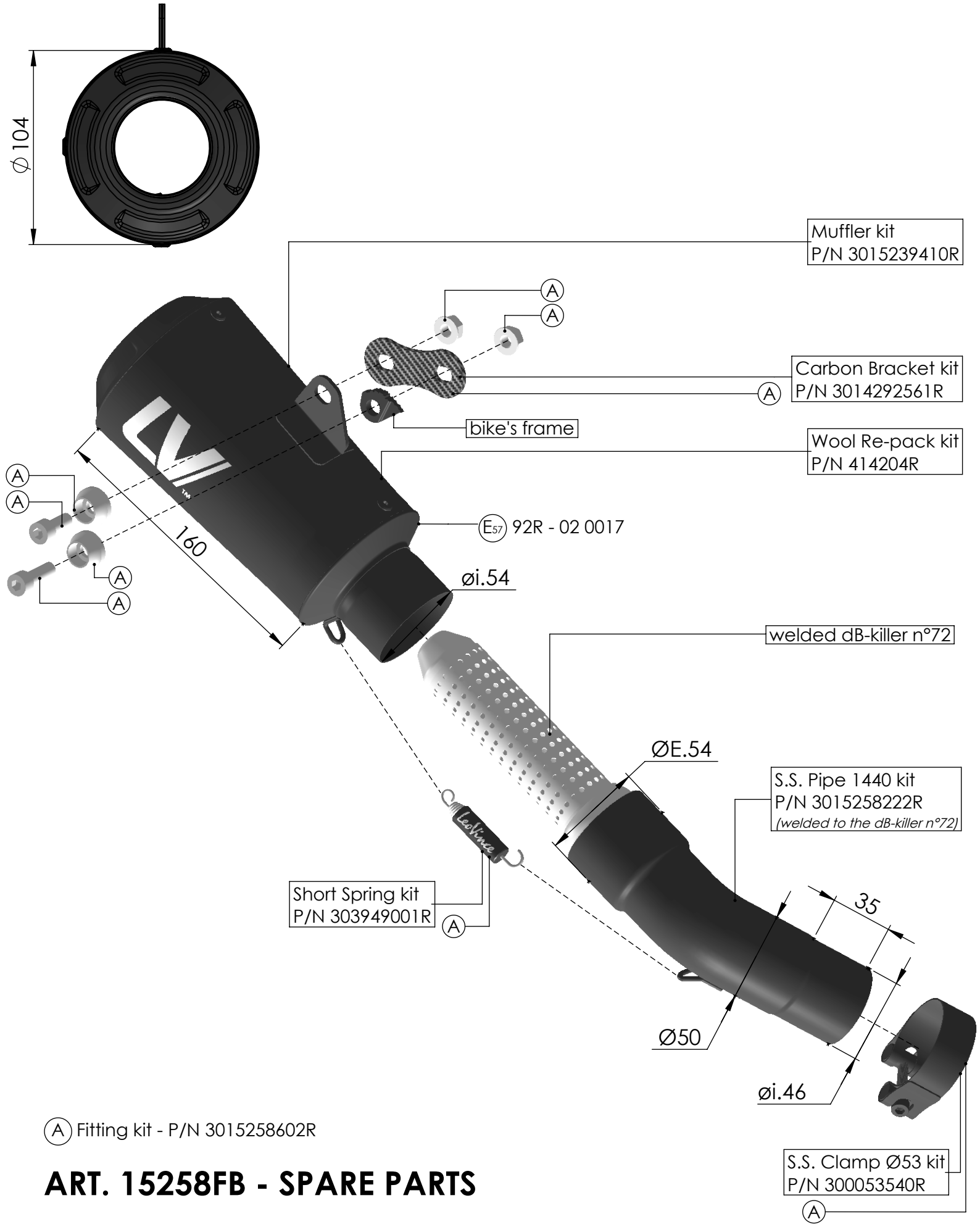

(A) Fitting kit - P/N 3015258602R

ART. 15258FB - SPARE PARTS

BENELLI LEONCINO 800 (also fits 35 kW version)

SLIP-ON - LV10 - FULL BLACK - APPROVED