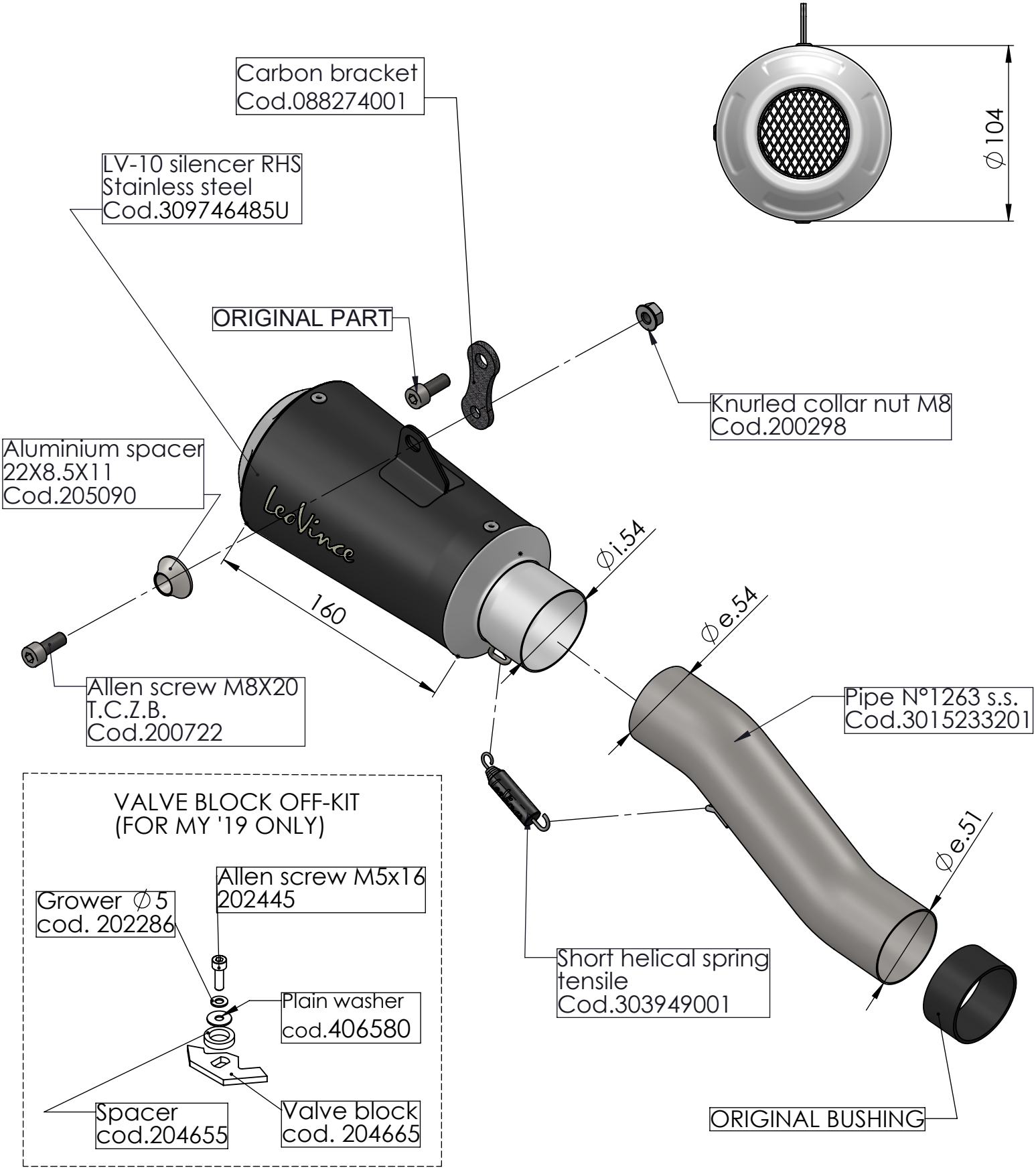

ART. 15233BU

KAWASAKI ZX-6R-NINJA

SLIP-ON - LV-10 - BLACK