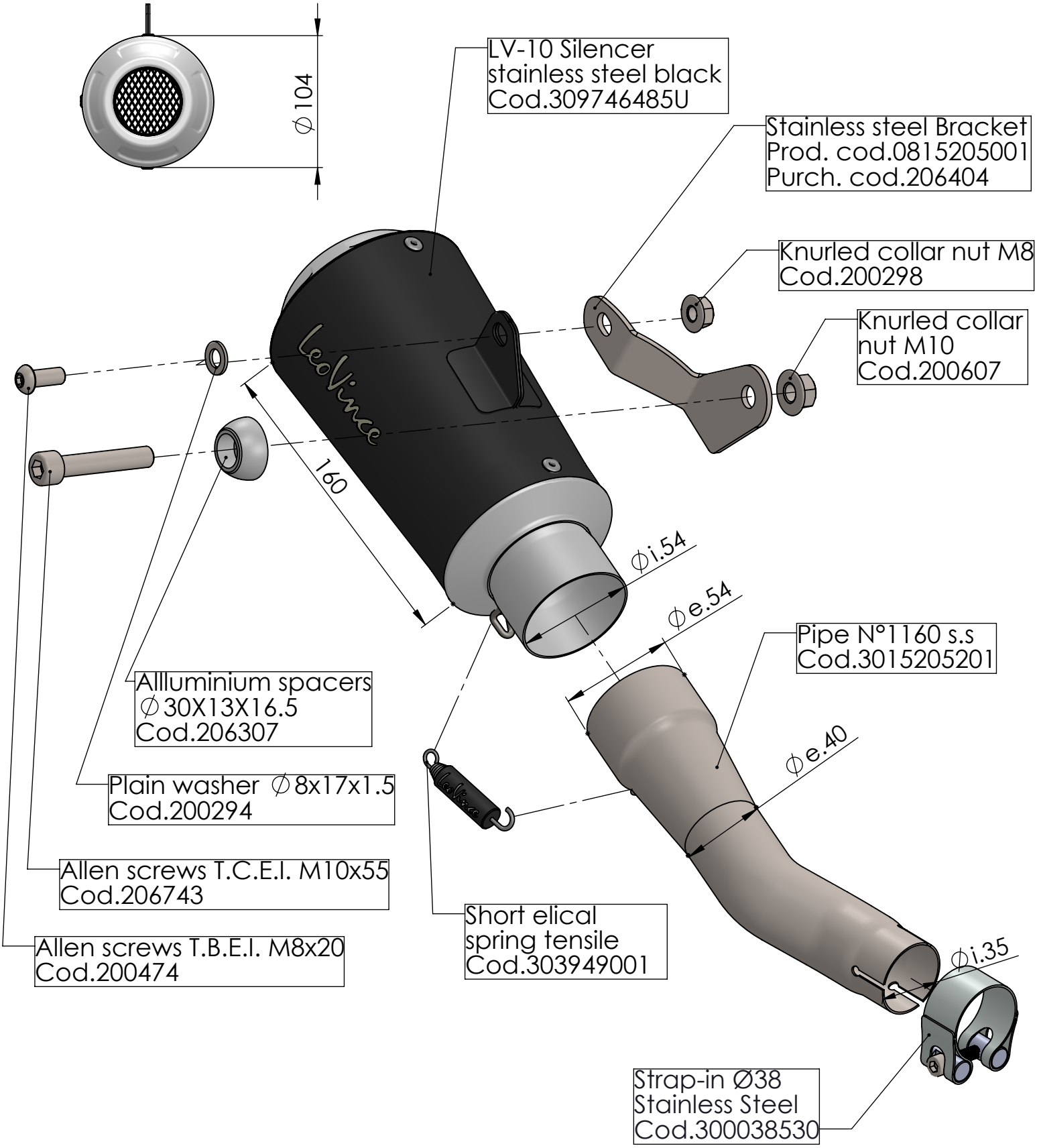

ART. 15205BU

KAWASAKI NINJA 250 R - NINJA 300 R / ABS - Z 250 - Z300 / ABS

SLIP-ON - LV-10 - BLACK