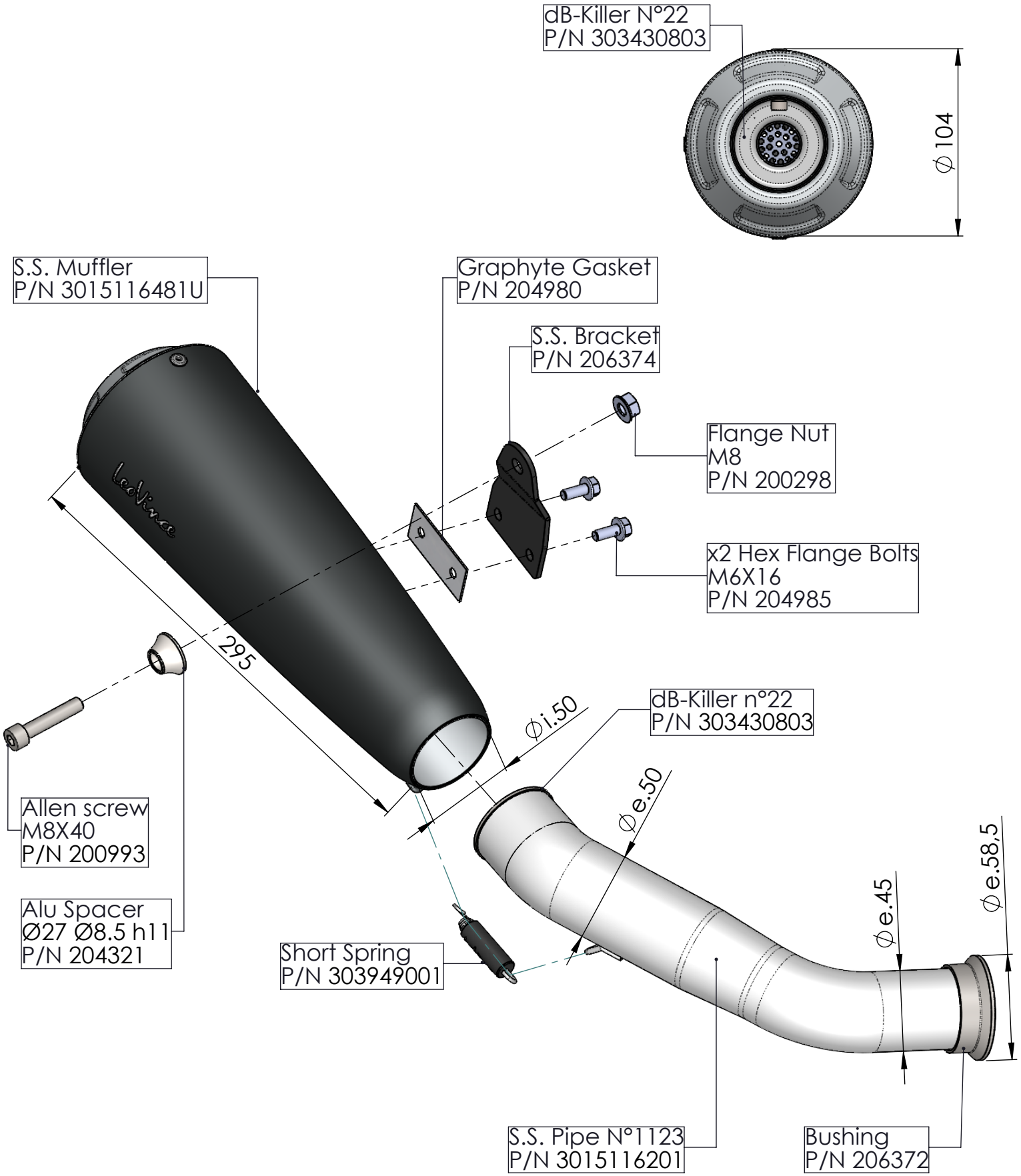

ART. 15116U

KTM RC 125 - DUKE 125 - RC 390 - DUKE 390 '17

SLIP-ON GP ONE