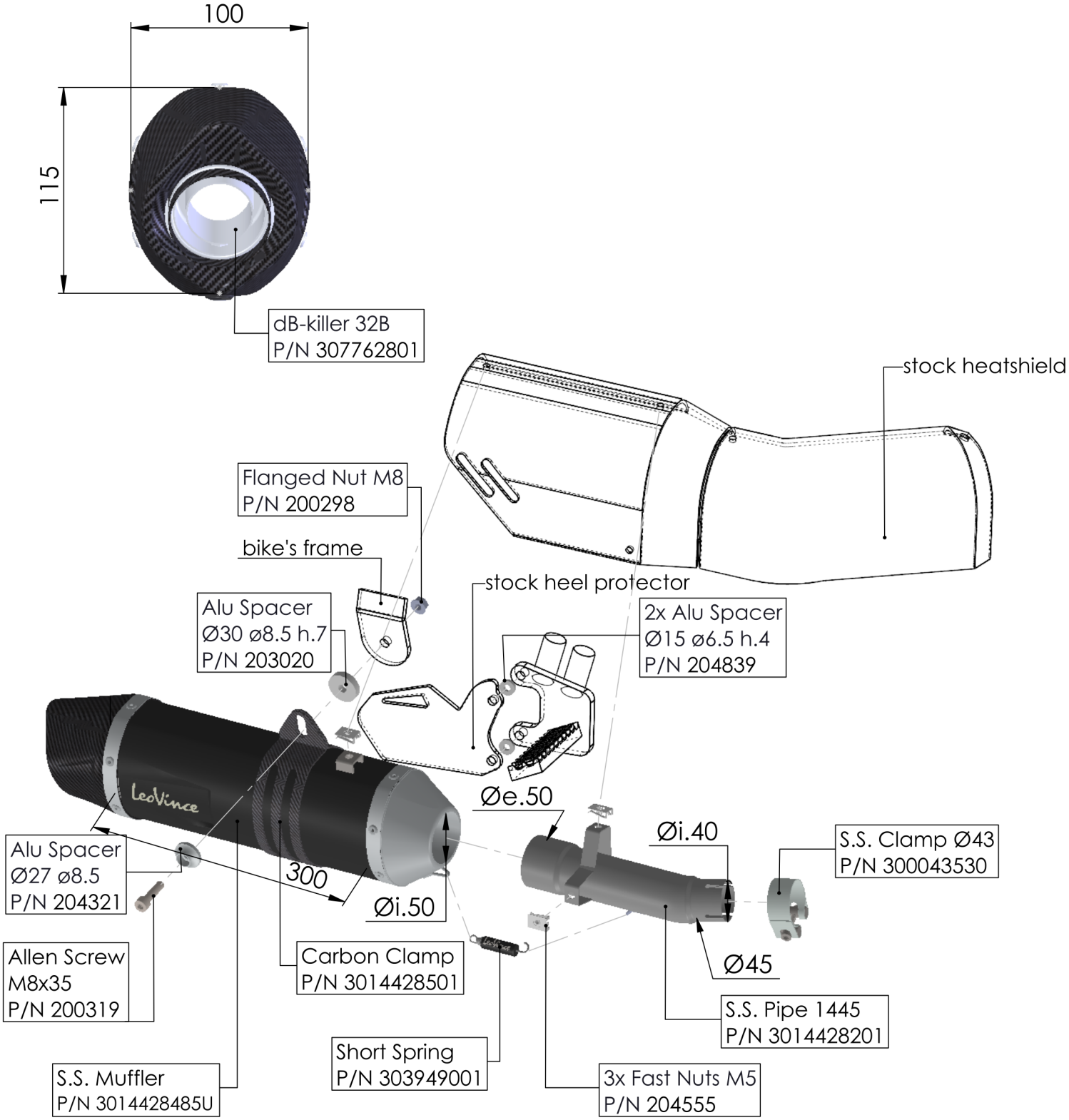

ART. 14428EBU

DUCATI DESERT X 937
(also fits 35kW version)

SLIP-ON LV ONE EVO BLACK EDITION