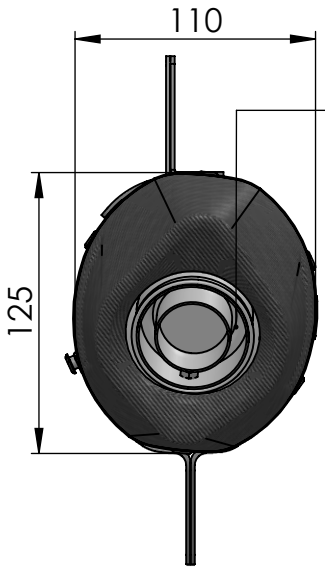

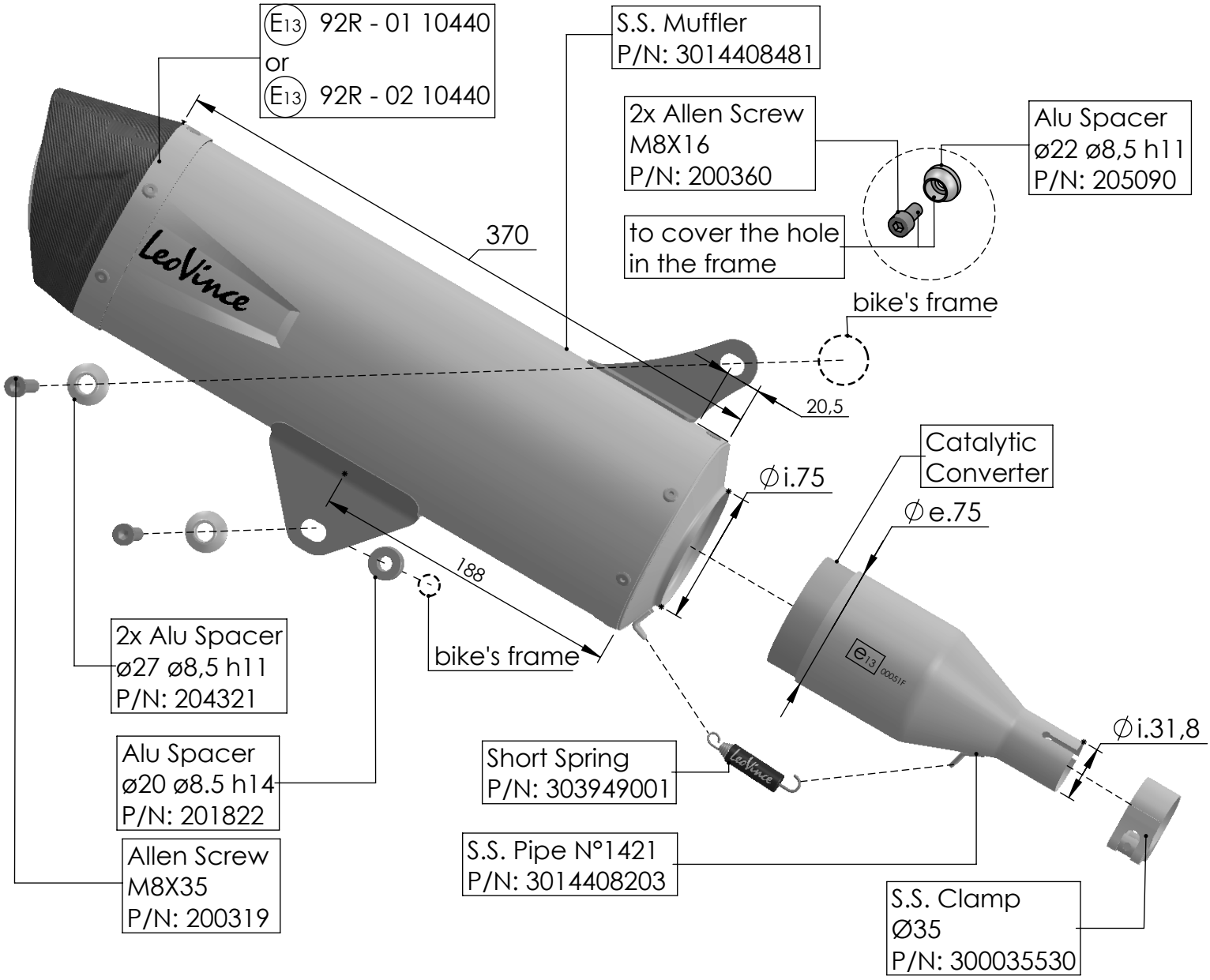

ART. 14408EK

APRILIA SR GT 125

SLIP-ON LV ONE EVO STAINLESS STEEL - APPROVED -