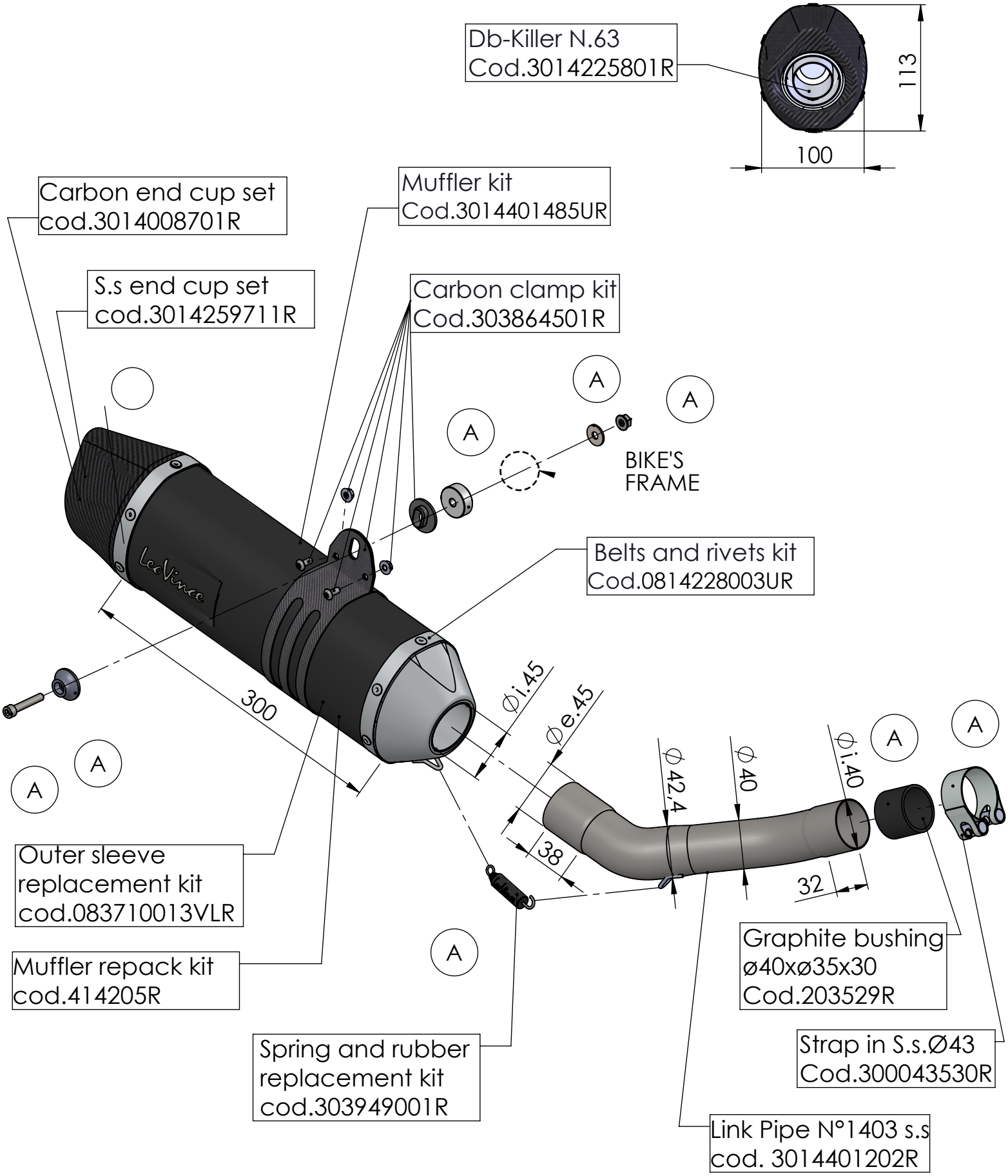

ART. 14401EBU - SPARE PARTS

BETA RR 4T 125 LC / RR MOTARD 4T 125 LC

Ⓐ FITTING KIT cod.3014401601R