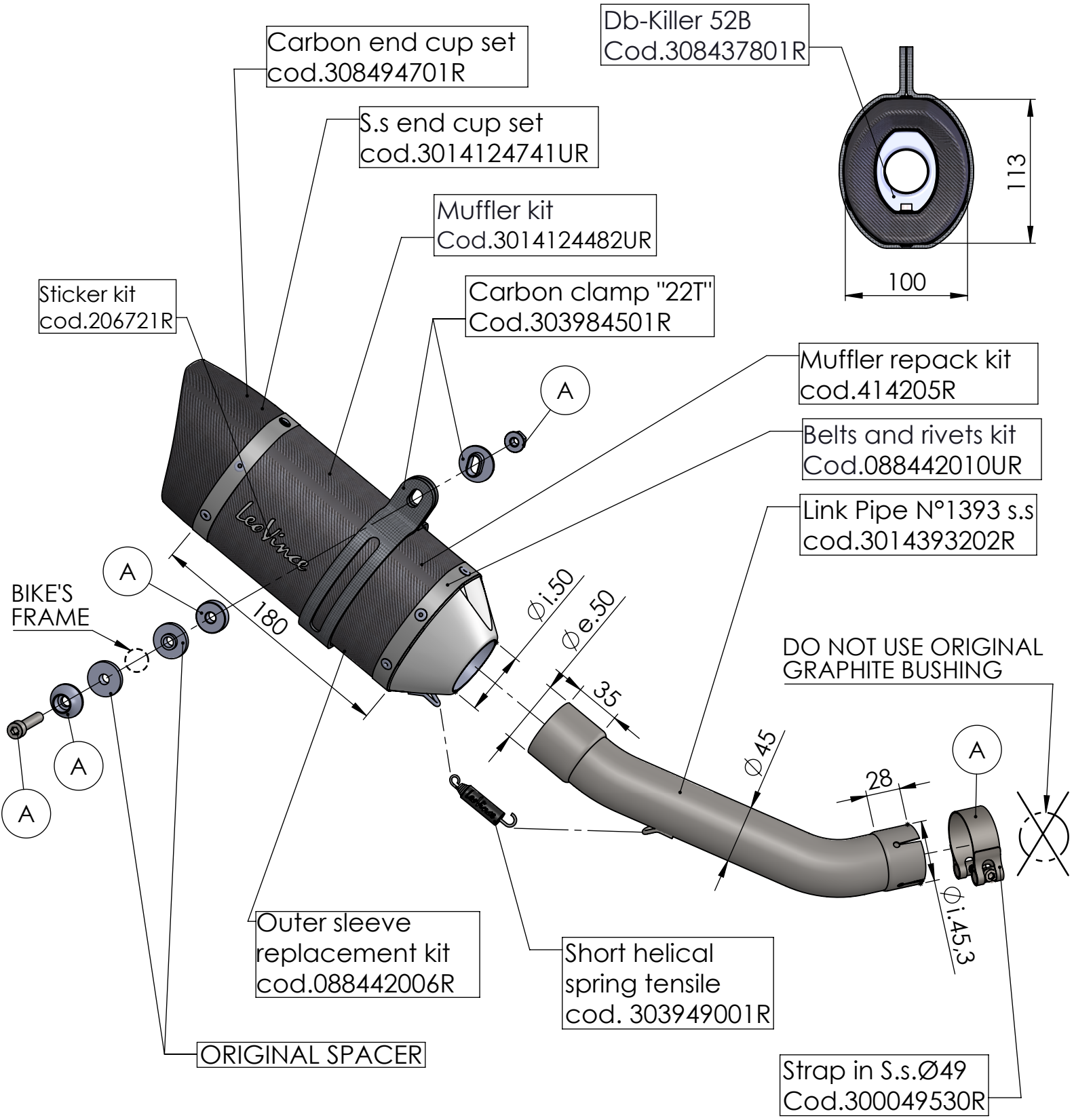

ART. 14396EU - SPARE PARTS

KTM DUKE 125 / 390

Ⓐ FITTING KIT cod.3014393601R