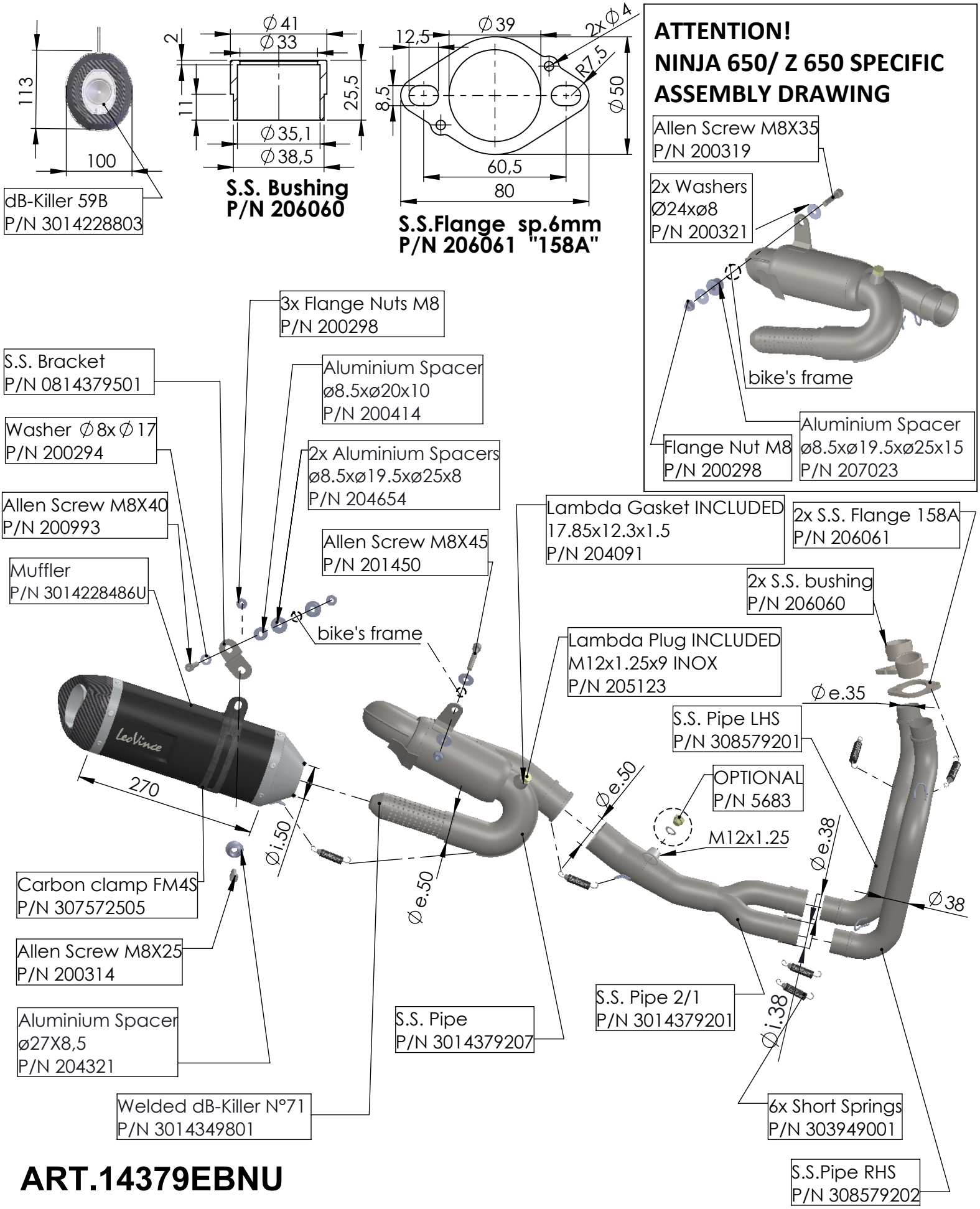


# ART.14379EBNU

KAWASAKI Z 650 / Z 650 RS / NINJA 650 / VERSYS 650
(Also fits 35kW version) (Fits with original panniers)

FULL SYSTEM - LV ONE EVO - BLACK