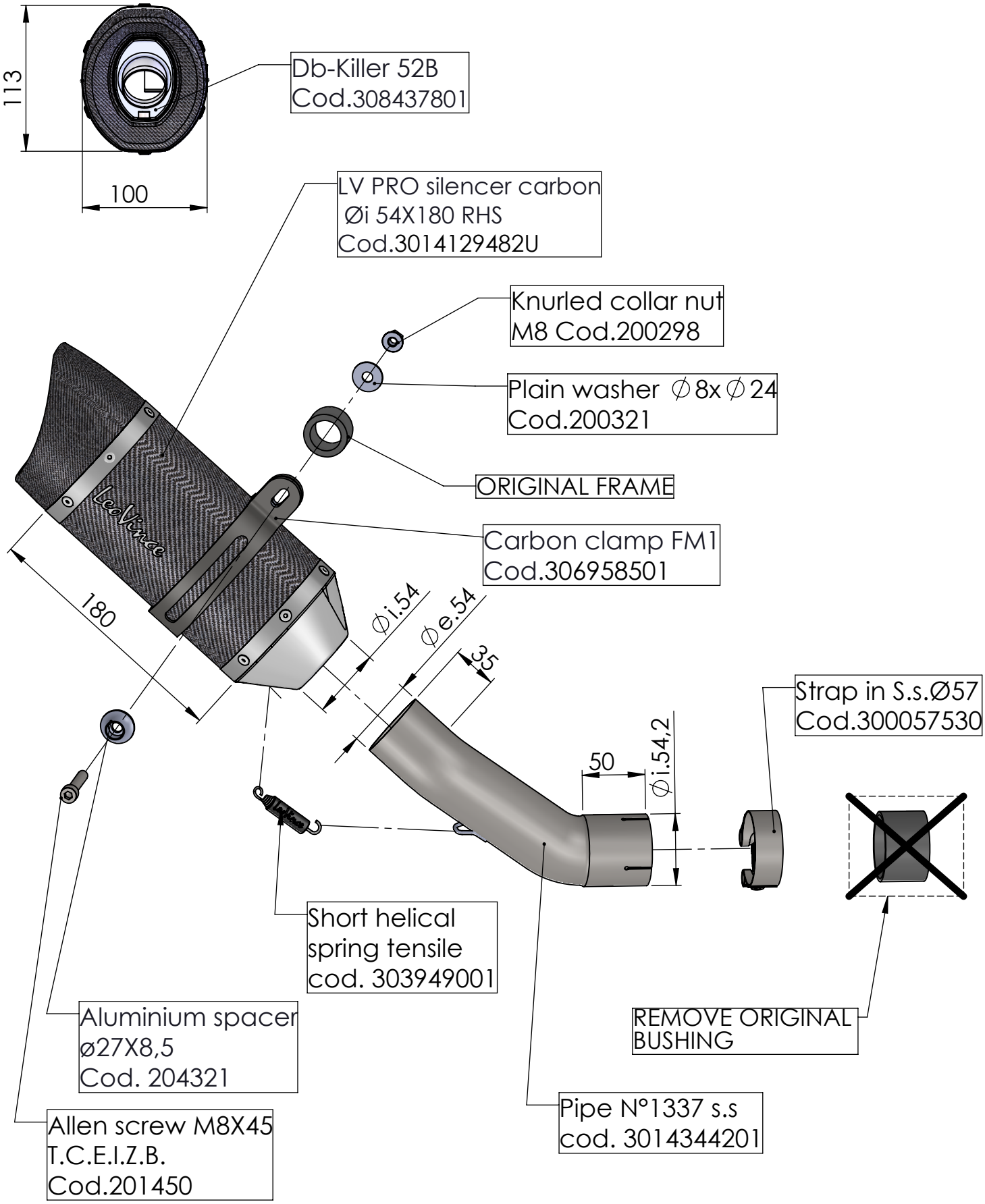

ART. 14344EU

KAWASAKI Z H2 1000

SLIP-ON - LV PRO - CARBON