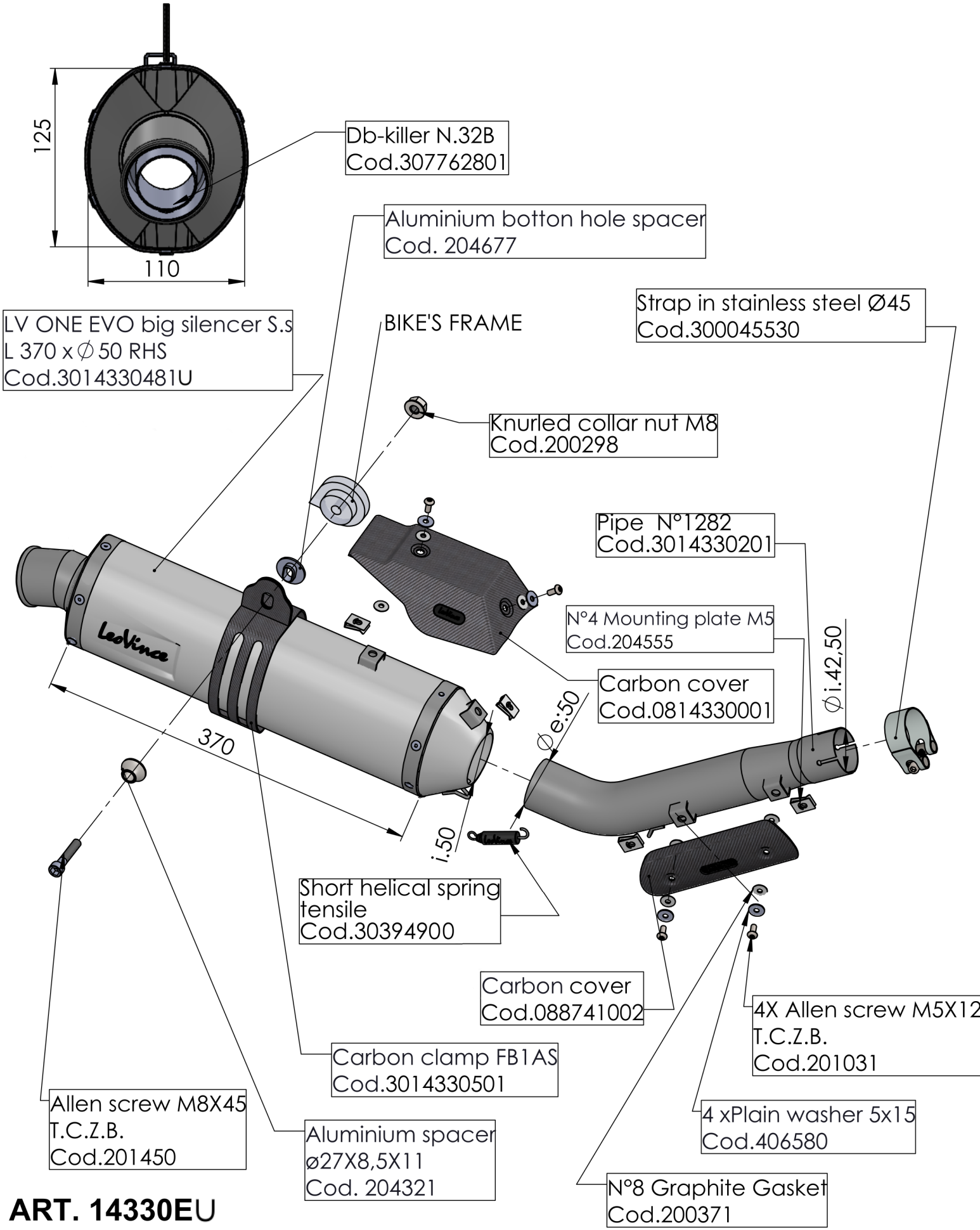

ART. 14330EU

YAMAHA TÈNERÈ 700
(fits with original panniers and centre stand) (also fits 35 kW version)

SLIP ON - LV ONE EVO - STAINLESS STEEL