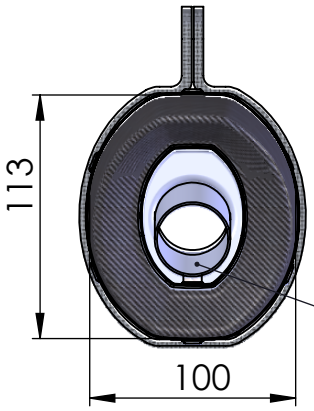

DB-Killer N°52B
Cod.308437801

LV PRO silencer
carbon fiber
Cod.3014124482U

Carbon bracket FM4S
Cod.307572505

Knurled collar nut M8
Cod.200298

Pipe N°1074 s.s.
Cod.3014124202

Busher 40X31,7XH30
LGR/F
Cod.206414

Strap in stainless
steel Ø41
Cod.300041530

Aluminium spacer
-for allen screw M8-
Cod.204321

Allen screw M8X40
T.C.Z.B.
Cod.200993

Short helical spring
tensile
Cod.303949001

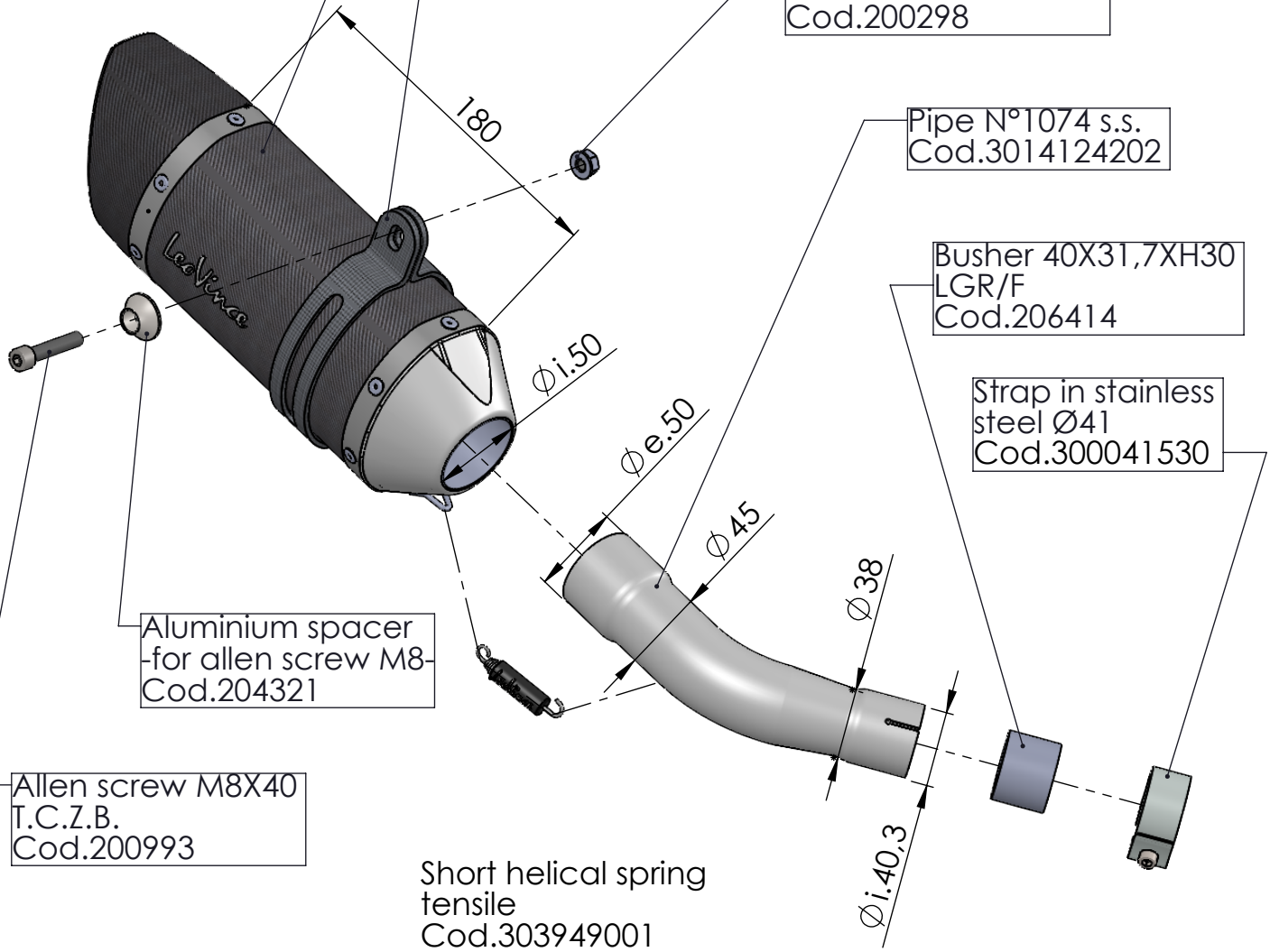

ART. 14258EU

YAMAHA YZF-R3 - MT-03

SLIP-ON - LV PRO - CARBON