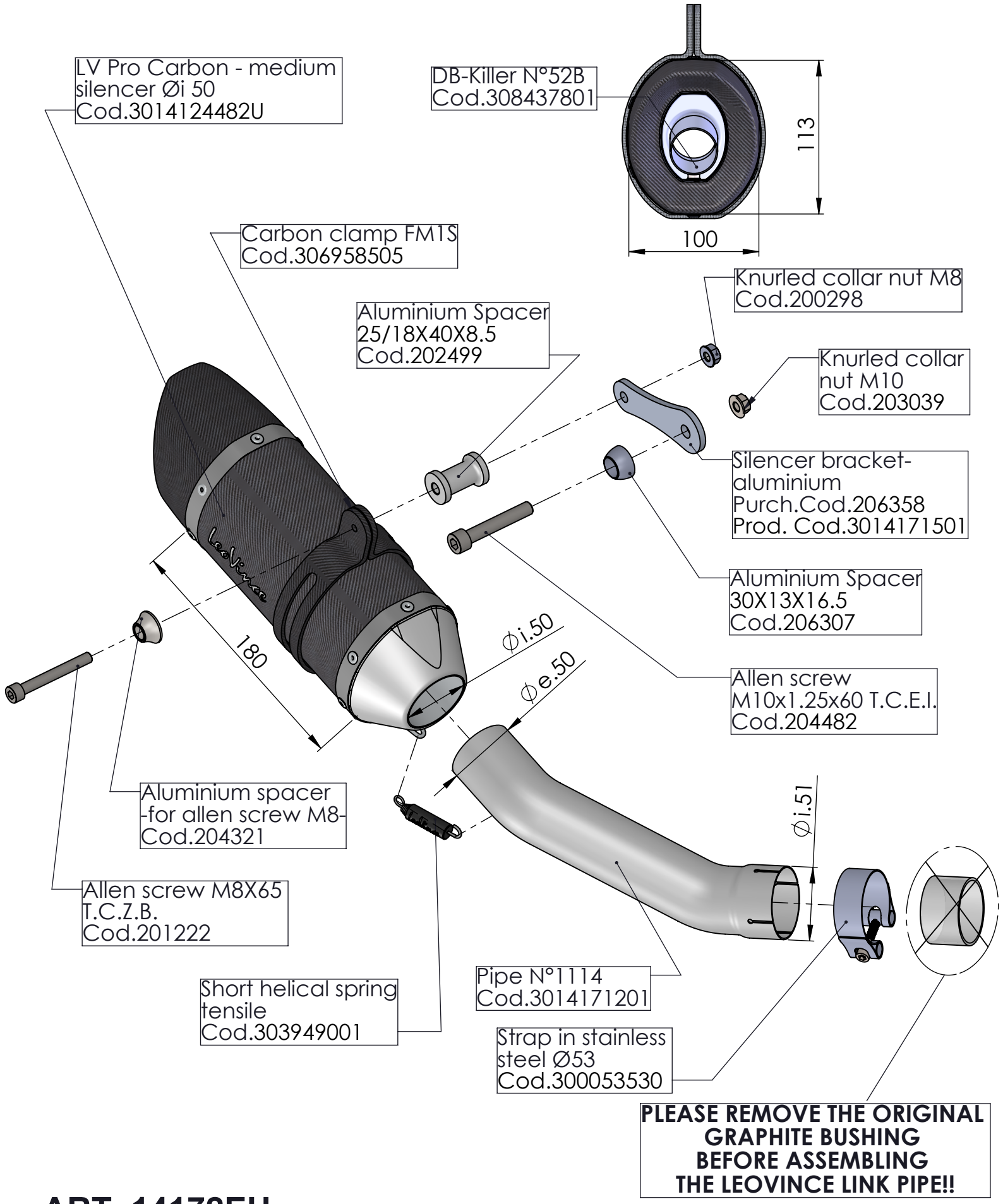

ART. 14172EU

KAWASAKI Z900 / Z900 A2 (also fits 35kW & 70kW versions)

SLIP-ON - LV PRO - CARBON