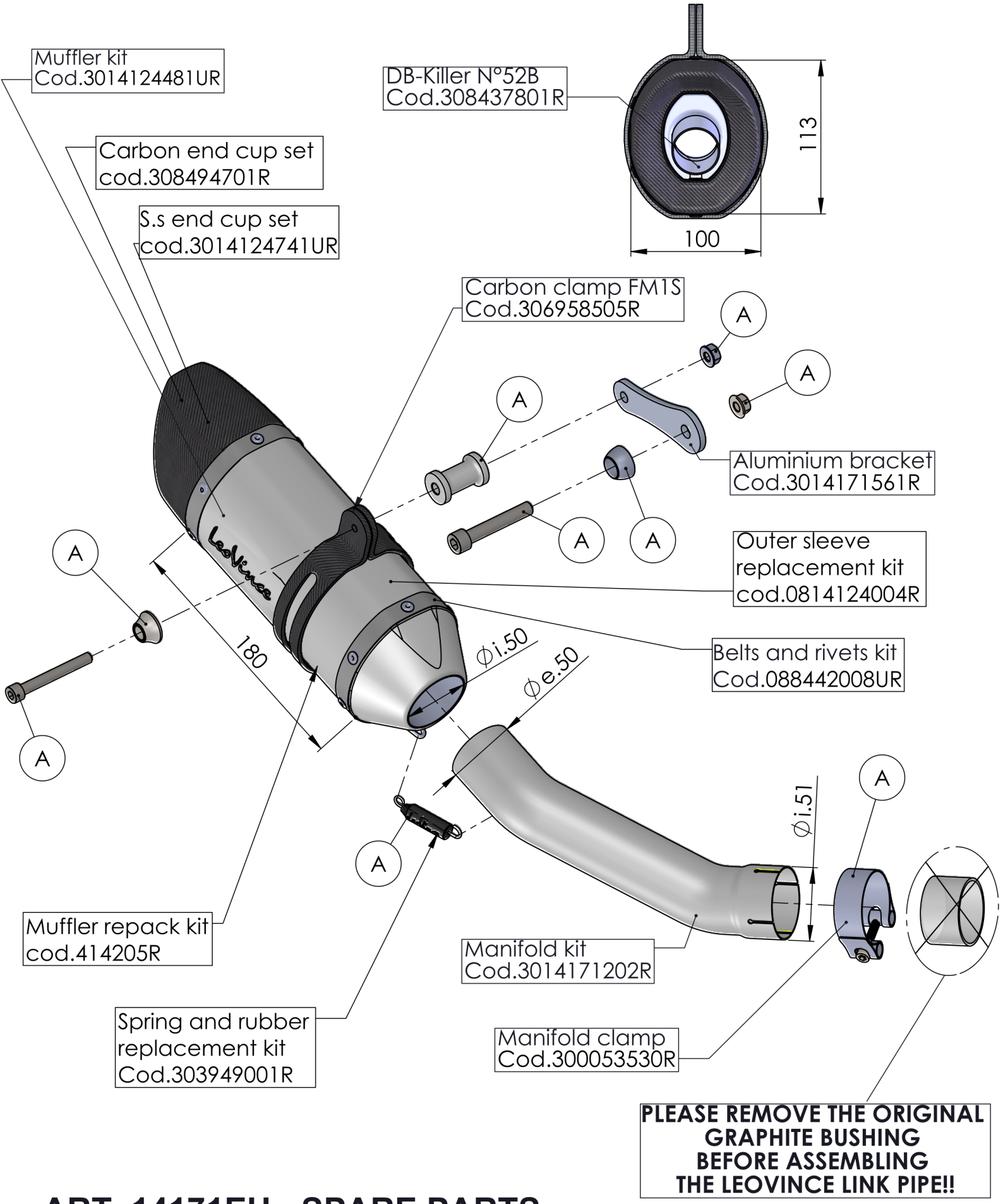

ART. 14171EU - SPARE PARTS

KAWASAKI Z900 / Z900 A2 (also fits 35kW & 70kW versions)

Ⓐ FITTING KIT cod.3014171601R