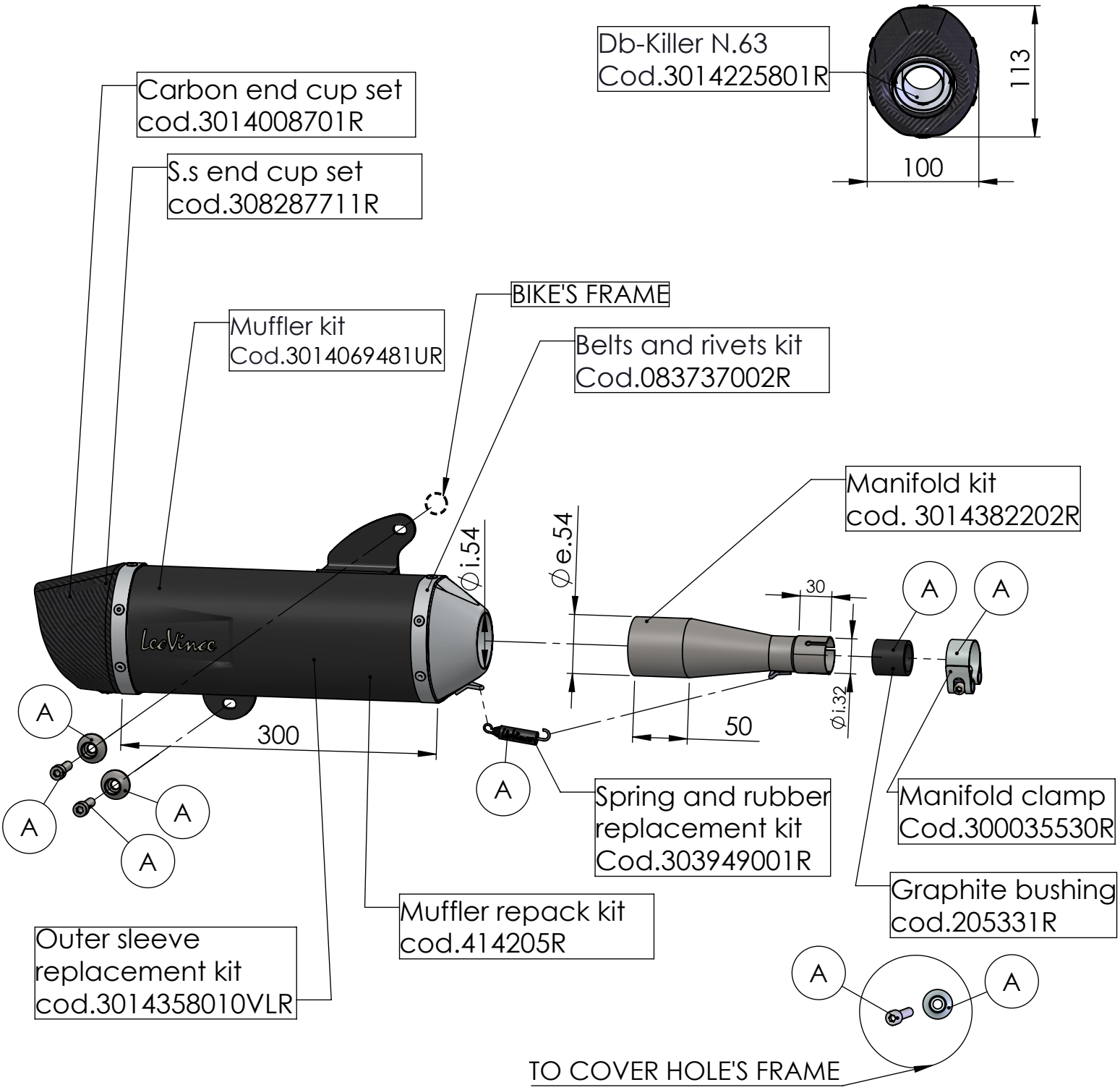

ART. 14080U - SPARE PARTS

PIAGGIO VESPA GTS 125 i.e. / SUPER

Ⓐ FITTING KIT cod. 3014358601R