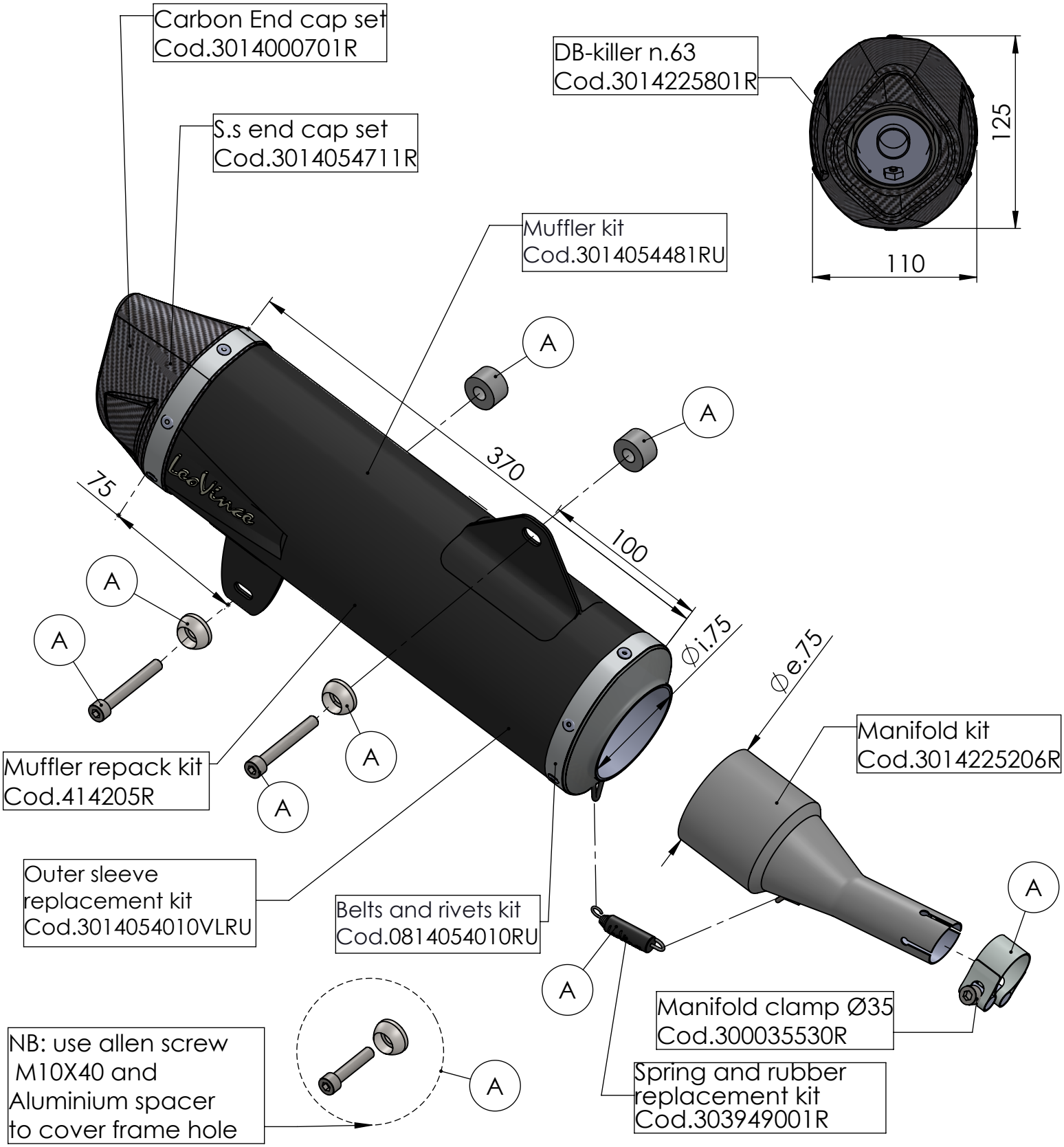

ART. 14054U - SPARE PARTS

YAMAHA X-MAX 300 / IRON MAX

Ⓐ FITTING KIT Cod. 3014225601R