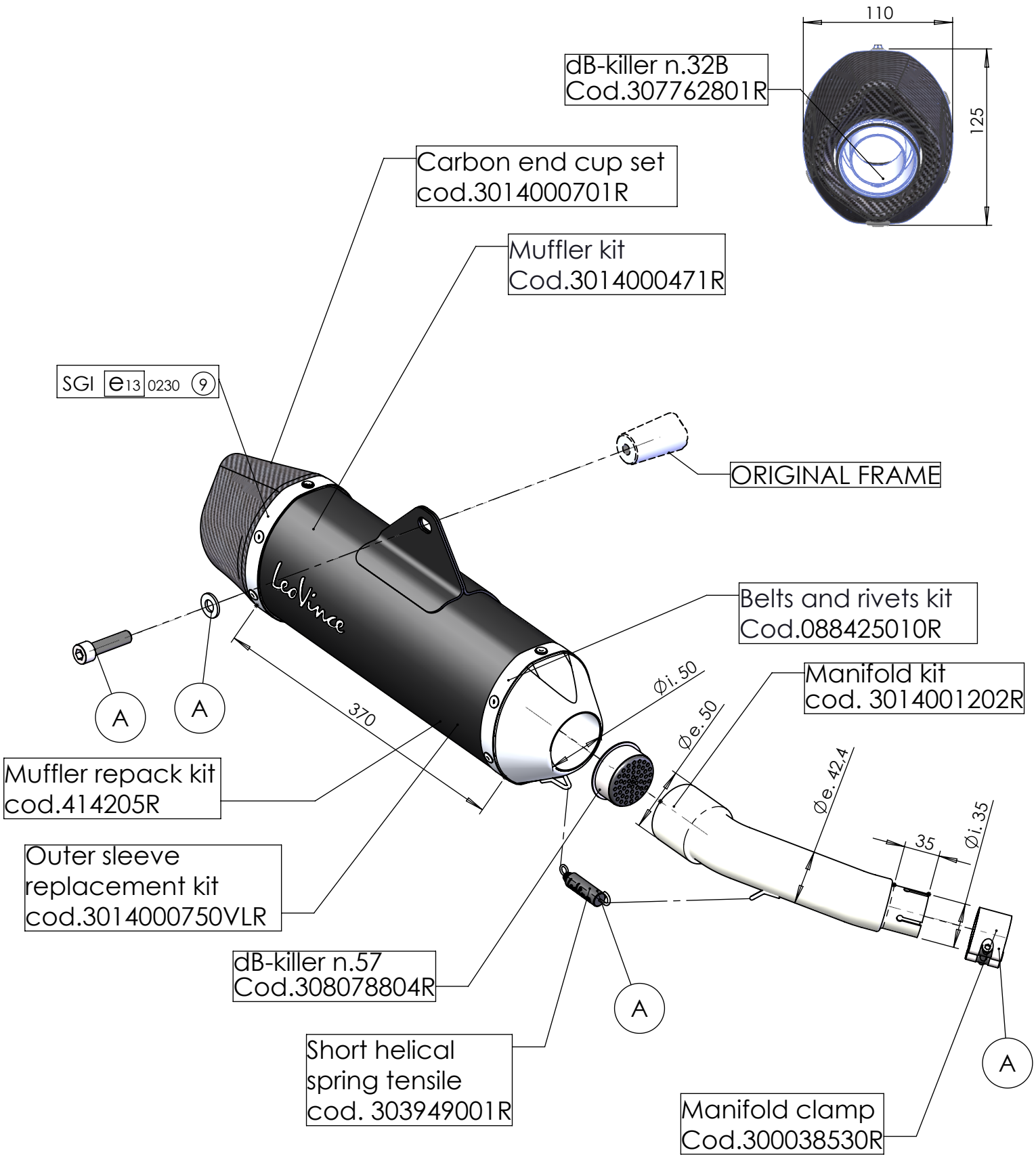

ART. 14001 - SPARE PARTS

YAMAHA X-MAX 400 i.e.

Ⓐ FITTING KIT cod.3014001601R